CAPE POTTERY SUPPLIES



Pottery Wheel Owner's Manual

PW-DC fixed & adjustable leg

Last Updated: November 2026

Congratulations on your purchase of a PW-DC Pottery Wheel.

We trust you will have safe and enjoyable use for many years.

Read this manual carefully before using your wheel.

If you have any questions after reading this manual, please contact us.

Contents:
Special Notes
Locating your wheel
Maintaining your wheel
Foot Pedals
Bat Pins
PW-DC Wheels
PW-DC Components
PW-DC Components Parts List
PW-DC Control Panel Components
PW-DC Control Panel Components Parts List
Disclaimer

Special Notes



Please take special note of the following:

- DO NOT OPPERATE IF PACKAGE SUSTAINED DAMAGED DURING TRANSIT.
- ENSURE ELCTRICAL SUPPLY IS APPROPRIATE & SECURED. AVOID EXTENTION CORDS, DOUBLE ADAPTORS OR POWER BOARDS.
- DO NOT OPERATE ELECTRICAL SWITCHES WITH WET HANDS.
- ENSURE THE FOOT PEDAL IS ALWAYS IN THE OFF POSITION WHEN STOPPING OR MOVING YOUR WHEEL.
- ENSURE YOUR WHEEL IS SWITCHED OFF AND UNPLUGGED FROM THE POWER SOURCE BEFORE CLEANING OR ANY MAINTENANCE.
- NEVER TOUCH OR TAMPER WITH ANY OF THE ELECTRICAL COMPONENTS OF THE WHEEL.
- TO CLEAN THE WHEEL, USE A WET SPONGE. DO NOT USE A GARDEN HOSE.
- DO NOT BLOCK OFF ANY DRAINAGE SPOUTS OR OVERFILL THE WHEEL TRAY AS THIS MAY RESULT IN WATER INGRESS INTO THE MOTOR.
- WHEELS ARE HEAVY, HANDLE WITH CARE WHEN MOVING OR LIFTING.
- DO NOT LIFT OR DRAG A WHEEL BY THE WHEELHEAD.
- ENSURE LONG HAIR AND LOOSE CLOTHING ARE SECURED AND UNABLE TO BE CAUGHT UP IN THE ROTATING MECHANISM OF THE WHEEL.
- DO NOT WEAR METAL ACCESSORIES OR JEWLLERY WHILE USING THE WHEEL.
- ENSURE THE WHEEL IS OPERATED ON A FLAT AND LEVEL SURFACE.
- ENSURE CHILDREN ARE NOT LEFT UNATTENDED NEAR THE MACHINE.
- ENSURE TOOLS AND ANY SMALL PARTS ARE OUT OF REACH OF CHILDREN.
- STOP OPERATION OF THE MACHINE IF YOU SMELL OR SEE SMOKE OR IF THERE ARE UNUSUAL NOISES.
- DO NOT INSERT HANDS OR OBJECTS INTO OPENINGS OR MOVING PARTS.
- REPAIRS OR MODIFICATION OF THE WHEEL IS MAY VOID ANY WARRANTY.
- ENSURE THE POWER CORD DOES NOT CREATE A TRIP HAZARD.
- IF THE POWER CORD BECOMES DAMAGED, DO NOT USE AND SEEK ADVICE FROM AN ELECTRICIAN.
- CONTACT US IF YOU HAVE ANY QUESTIONS OR CONCERNS. WE ARE ALWAYS HAPPY TO HELP.
- HAVE FUN AND ENJOY CREATING WONDERFUL PIECES OF ART.

Locating your Wheel:

The location of your wheel is important and there are certain precautions that should be observed when choosing a suitable position. Accessibility and safety are primary considerations.

- Select a dry, well-ventilated area that has good access.
- Ensure that the wheel is placed on a flat, solid surface.
- Position water and cleaning products within easy reach.
- Ensure all combustible and flammable materials such as curtains, plastic, paper etc. are well away from the wheel.
- Do not rest anything against the wheel or place heavy objects on top of the wheel.
- If you are positioning your wheel in an outdoor area, such as a verandah, outdoor shed, or carport, ensure it is always shielded from rain & condensation.
- A heavy-duty BBQ cover placed over the wheel when not in use is a good idea.

NOTE

Electricity & Water can be a deadly combination!

Stop & think, always use sensible precautions and keep children under close supervision.

Maintaining your Wheel



Wheels can last many, many years when they are carefully care for. There are some simple tricks to maintaining your kiln in tip-top condition.

Please ensure you operate your wheel with due care and attention.

- Always avoid excessive clay build up, especially around the wheel shaft bearing.
- Keep your wheel head clean with a damp sponge.
- Please contact us if you have any questions or queries.

FOOT PEDALS:

Foot pedals are very low voltage (like a 9V battery), however you should be careful and considerate with its use to prevent damage.

- With the foot pedal tipped back, the wheel head should not rotate.
- As the foot pedal is pushed forward, the speed should increase smoothly.
- Always allow the motor to come to a complete stop before changing directions of the wheel head.
- Store the foot pedal on the wheel table when not in use to prevent accidental damage.
- If the wheel does not turn off with the foot pedal back, or does not run fast enough, you may need to adjust.
- If you wish to reverse the direction, tip the foot pedal toward you in the "off" position. When the wheel stops, move the FWD/REV toggle switch to either Forward or Reverse.
- If you want to control 'wheel creep', you can access a info page or watch a short video.



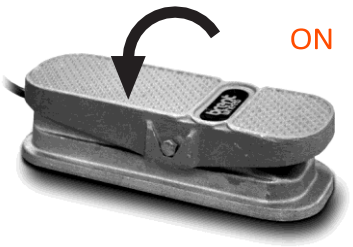

Bat Pins:

Bat pins are used to attach a 'bat' to the wheelhead when throwing. Also known as a batter board, a pottery wheel bat is a thin slab of wood, plaster, or plastic that is used to support pottery forms while you throw. Because the bat piece can be lifted from the wheel head, there's no need to directly handle your clay piece and risk distorting its shape.

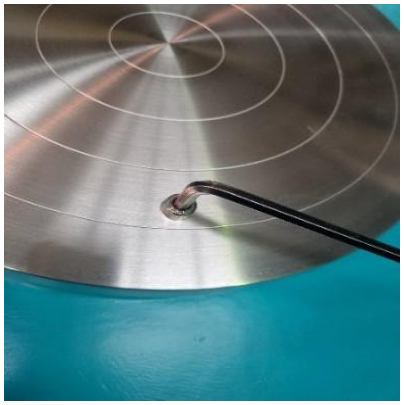

- Remove Bat Pins using a 6mm Allen Key.

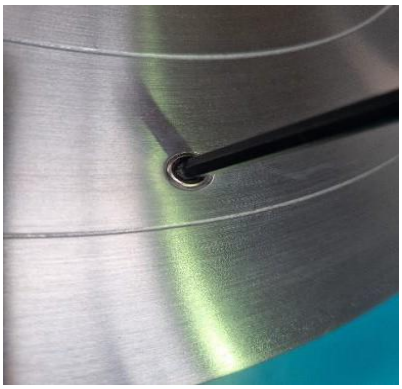

- Replace Bat Pins with blanking plugs using a 4mm Allen Key.

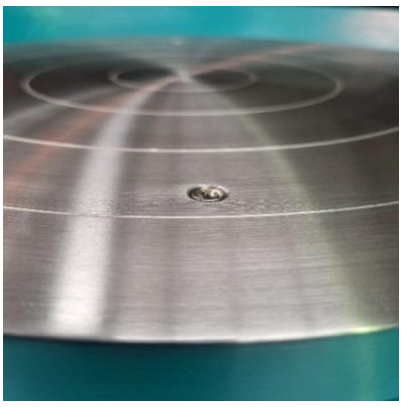

- Blanking plugs sit just below flush with the wheelhead.

The PW-DC Wheel:



Make sure the foot pedal is in the off position and the rotation switch is in the middle position before connecting your wheel to the power supply.

- Always avoid excessive clay build up, especially around the wheel shaft bearing.
- Keep your wheel head clean with a damp sponge.
- The Reversing Switch:
    - Right - Wheelhead rotates counterclockwise
    - Left - Wheelhead rotates clockwise
- Before changing wheelhead direction:
    - Turn Motor off
    - Wait until wheelhead has stopped spinning
    - Then turn switch in opposite direction
- Speed is controlled by how much you depress the pedal. Step forward to increase wheelhead speed and step back to slow down the speed.
- Splashpan Installation:
    - Facing the front of the wheel, slide the smaller half-moon portion of the splashpan under the wheelhead flange.
    - From the back side of the wheel, slide the larger portion of the splashpan under the wheelhead flange until both pieces fit together.
    - Slide the 2 clips over the splashpan joints. The clips help prevent water entering the wheelhead bearing. However, the splashpan is not designed to be watertight.
    - To remove the splashpan reverse the above process.
- To remove the wheelhead:
    - Unscrew the hex-bolt under the wheelhead.
    - Using both hands, grasp each side of the wheelhead and lift straight upward.
    - When re-installing, the hex-bolt must be aligned against the **flat side** of the wheel shaft and tightened securely.

NOTE

Always disconnect from the power source before undertaking repairs or maintenance.

PW-DC Components:

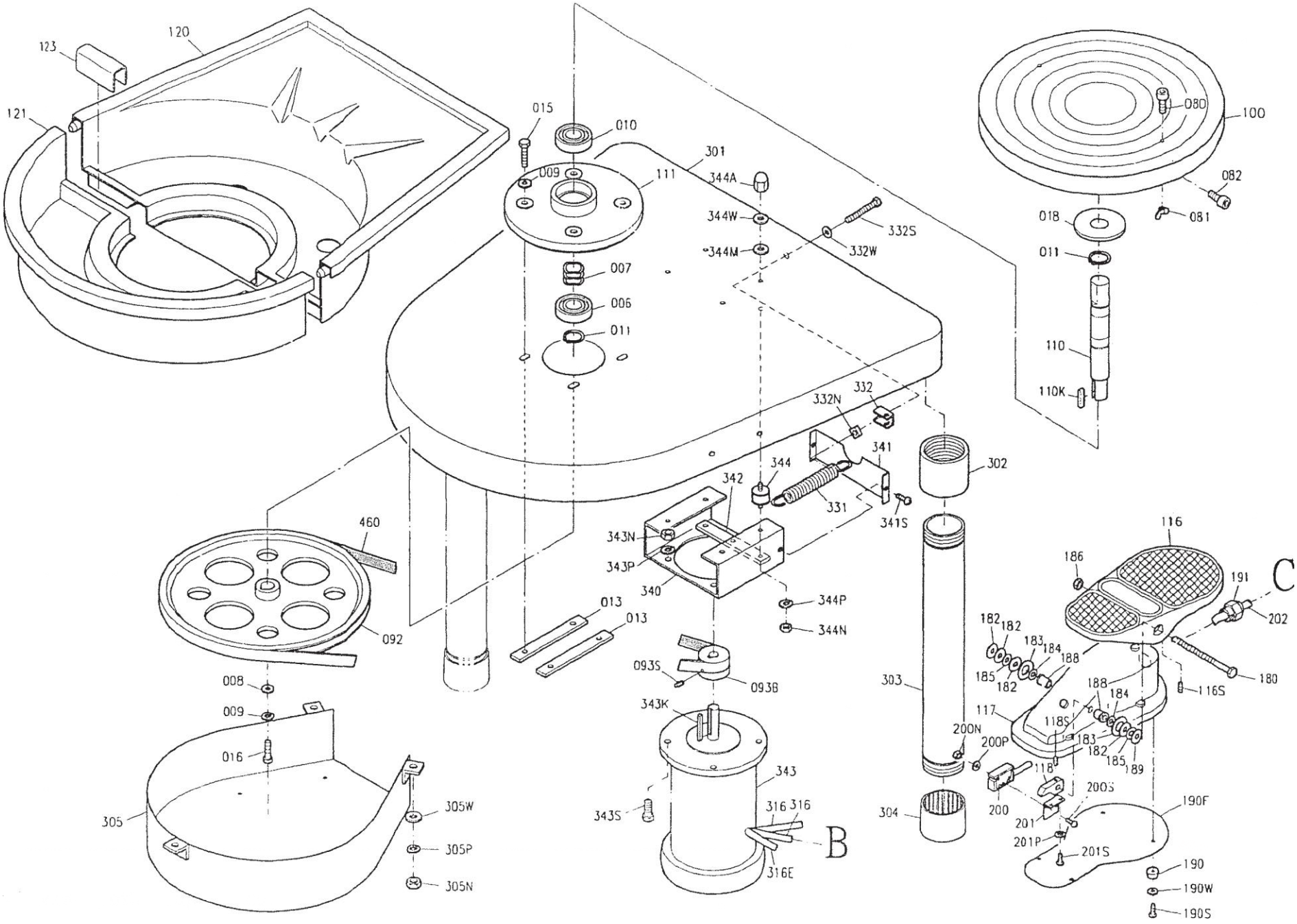

PW-DC Components Parts List:

Parts No.	Description	Parts No.	Description
006	Bearing	121	Splash pan, back
007	Wave Washer	123	Splash Pan Clamp
008	Washer	180	Hex Head Bolt
009	Lock Washer	182	Washer
010	Bearing	183	Washer
011	Snap Ring	184	Washer
013	Plate Nut	185	Washer
015	Hex Head Screw	186	Hex Nut
016	Hex Head Screw	188	Bushing
018	Dust Cover	189	Washer
080	Socket Head Cap Screw	190	Pad
081	Wing Nut	190F	Bottom Plate
082	Socket Head Cap Screw	190S	Round Head Screw
092	Idle Pulley	190W	Washer
093B	Motor Pulley	191	Cable Fastener
093S	Socket Head Set Screw	200	Potentiometer
100	Wheel head	200N	Hex Nut
110	Main Shaft	200P	Lock Washer
110K	Key	200S	Round Head Screw
111	Bearing Holder	201	Bracket
116	Foot Pedal, Upper	201P	Lock Washer
116S	Socket Head Set Screw	201S	Round Head Screw
117	Foot Pedal, Bottom	202	Cable
118	Toggle	301	Top Frame
118S	Socket Head Set Screw	302	Leg Bracket
120	Splash Pan, forehead	303	Leg

304	Leg Pad	341S	Round Head Screw
305	Belt Cover	342	Spring Plate
305N	Hex Nut	343	DC Motor
305P	Lock Washer	343K	Key
305W	Washer	343N	Hex Nut
316	Electric Wire	343P	Lock Washer
316E	Earth Wire	343S	Hex Head Screw
331	Spring	344	Cushion
332	Nut Bracket	344A	Round Head Nut
332N	Nut	344M	Nylon Washer
332S	Hex Head Screw	344N	Hex Nut
332W	Washer	344P	Lock Washer
340	Motor Rack	344W	Washer
341	Bracket, Spring	460	Poly-V Belt

PW-DC Control Panel Components:

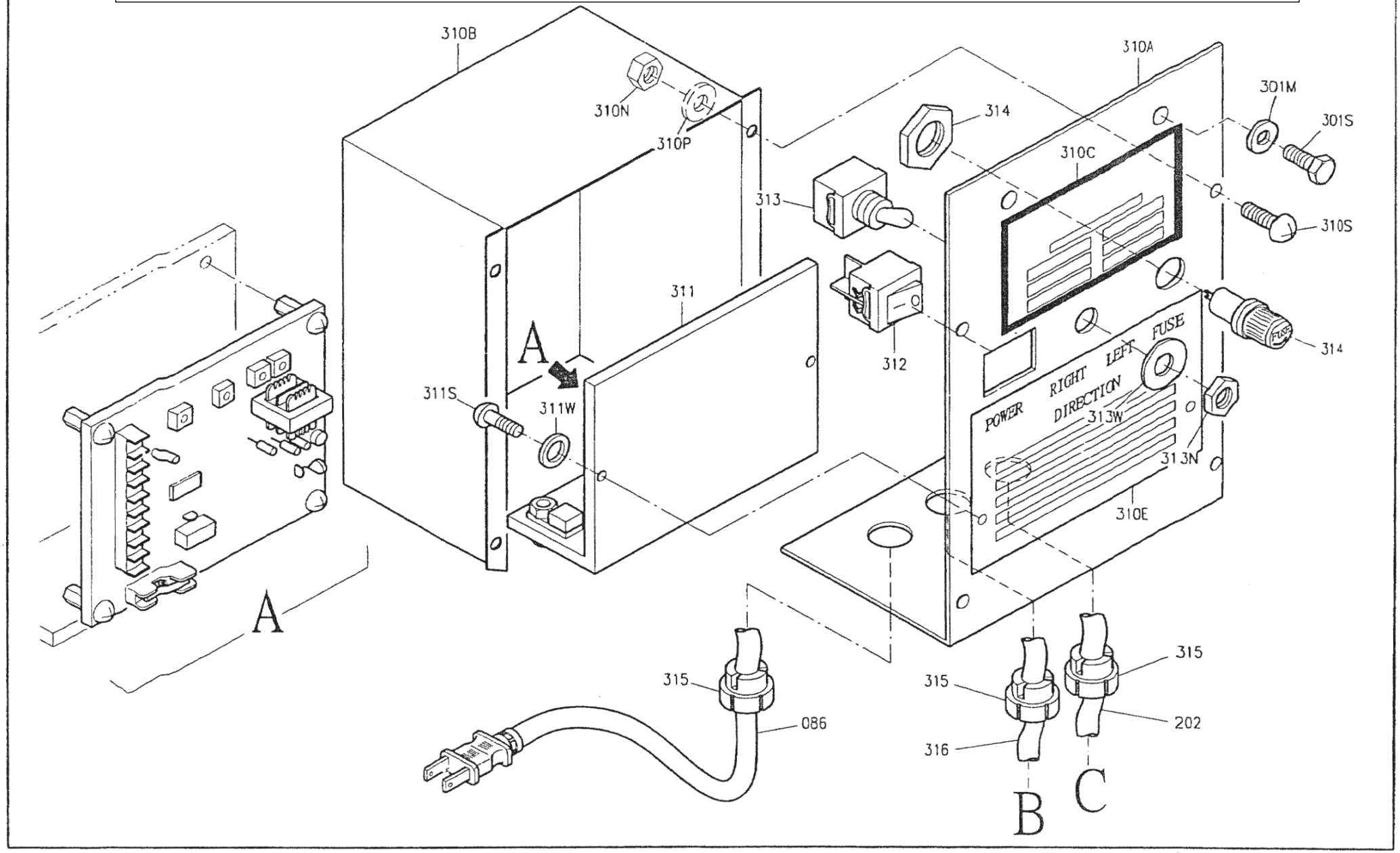

PW-DC Control Panel Parts List:

Parts No.	Description	Parts No.	Description
086	Plug & Cable	311	DC Controller
202	Cable	311S	Round Head Screw
301M	Nylon Washer	311W	Washer
301S	Hex Head Screw	312	Main Switch
310A	Control Plate	313	Toggle Switch
310B	Control Box	313N	Hex Nut
310C	Name Plate	313W	Washer
310E	Instruction Label	314	Fuse Box & Fuse
310N	Hex Nut	315	Cable Fastener
310P	Lock Washer	316	Cable
310S	Rivet		

Disclaimer

Please note that your wheel has been designed and manufactured for precision work. Your wheel must be operated in accordance with both this operating manual as well as any manual provided by the manufacturer. Any unauthorized use that violates the above preconditions, shall immediately void all warranties. Cape Pottery Supplies and associated entities make no representations, guarantees whether expressed or implied, other than those as contained within the respective operating manuals.

For detailed information our warranty or to review the Terms & Conditions, please refer to the resources section of the Cape Pottery Supplies website



Cape Pottery Supplies

Unit A2, 11 Celie Road, Retreat Industria, Retreat, Western Cape, 7945,

Cape Town, South Africa

Phone: +27 21 701 6682

Email: info@capepotterysupplies.co.za